IMPORTANT

CUTTING OPENING

* Only a professional stone fabricator is qualified to perform this cut.
* Measure the length and width of the bowl, then add 1/2" to the length and width. This is the dimension of the opening to be cut on the counter top.

SILICONE CAULKING

* MUST use 100% silicone for this installation.
* Silicone color should match counter top color as close as possible.
* If there is NO matching color to the counter top, use CLEAR silicone.
* NEVER use "SILVER" silicone.
* NEVER perform this procedure outdoor and under sunlight.
* If performed under an extremely hot and dry climate, caulking of the sink frame should be performed by two persons at the same time.
* Immediately install the sink into counter top opening.

Copyright 2007-2011 Mila International, Inc. www.mila-international.com

Mila International DUAL-MOUNT Installation Instructions
TOP-MOUNT

INTRODUCTION

Thank you for choosing a Mila International, Inc. DUAL-MOUNT sink.

Before you begin:
- Please carefully read these instructions.
- Unpack and inspect the sink carefully. Do not install if the sink is damaged.
- Save all original packaging and receipts.
- Check and follow all local plumbing code.

Recommended tools and materials

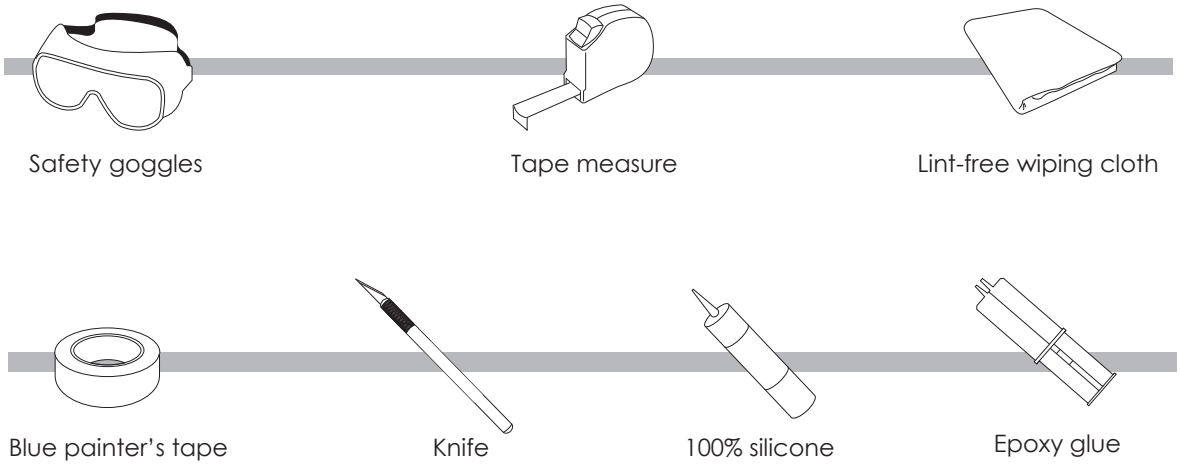

Copyright 2007-2011 Mila International, Inc. www.mila-international.com

Step 1: CUTTING OPENING

Measure the length and width of the bowl, then add 1/2" to the length and width. This is the dimension of the opening to be cut in the counter top.

IMPORTANT *** ONLY A PROFESSIONAL STONE FABRICATOR IS QUALIFIED TO PERFORM THIS CUT.**

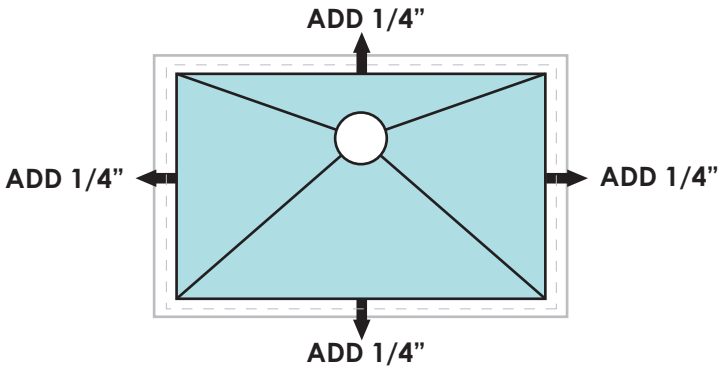

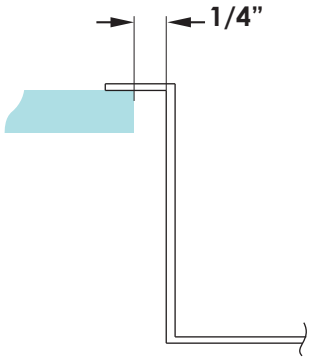

Step 2: CLEANING

Gently clean the counter top and the sink frame to remove all dirt, oil, and contaminants from the surfaces. Do not use any abrasive cleaning solutions that may damage the counter top surface and sink frame.

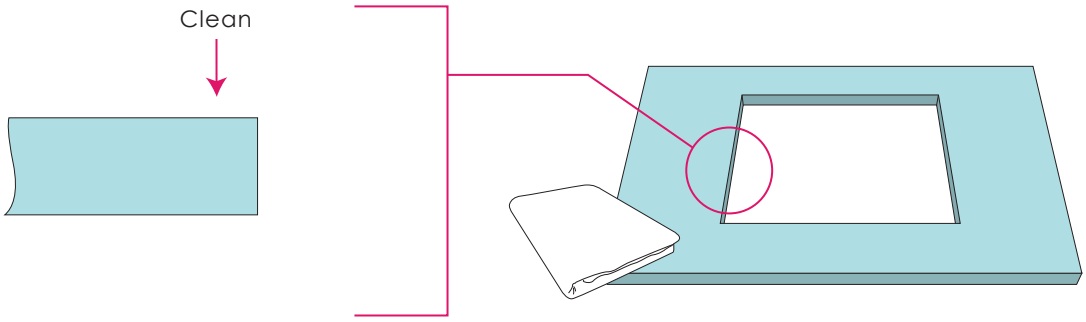

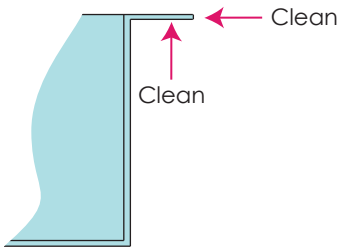

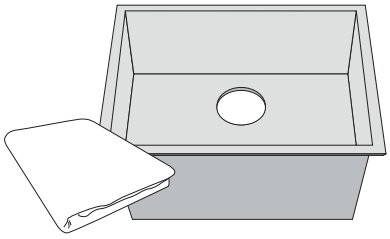

Copyright 2007-2011 Mila International, Inc. www.mila-international.com

Step 3: COUNTER TOP PREPARATION

1. Carefully place sink into the counter top opening and align it correctly ensuring that it sits square.

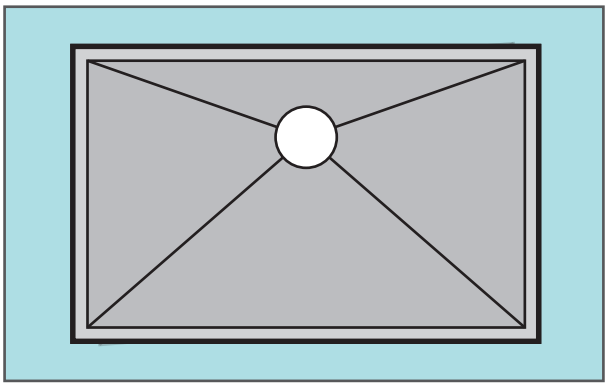

2. Stick blue tape to the counter top to carefully and accurately outline the sink frame.

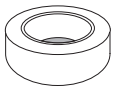

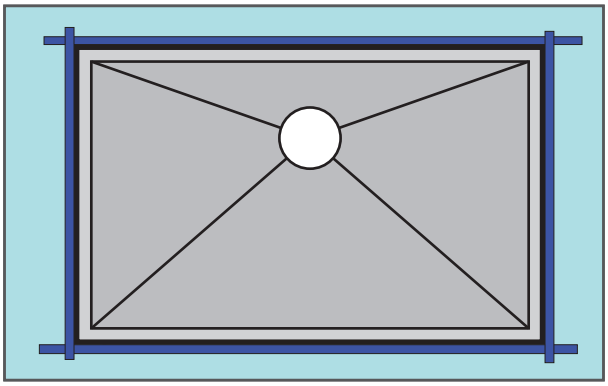

3. Remove the sink from the counter top, leaving the blue tape guide for installation.

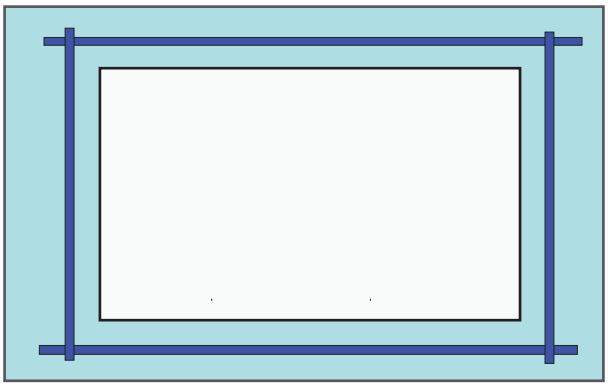

Copyright 2007-2011 Mila International, Inc. www.mila-international.com

Step 3: SILICONE CAULKING

IMPORTANT

*** Immediately install the sink into counter top opening once.**

Butter coat the bottom of the sink frame with a thin coat of 100% silicone on all four sides where it will rest on the counter.
*Please follow diagram below.

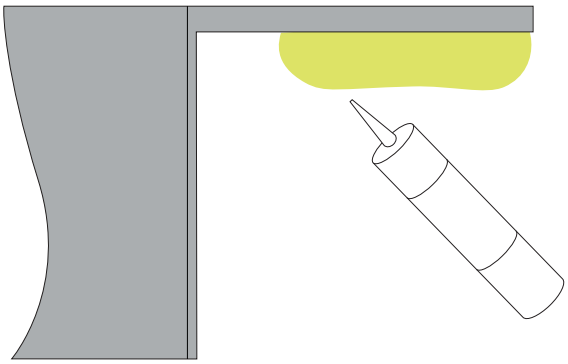

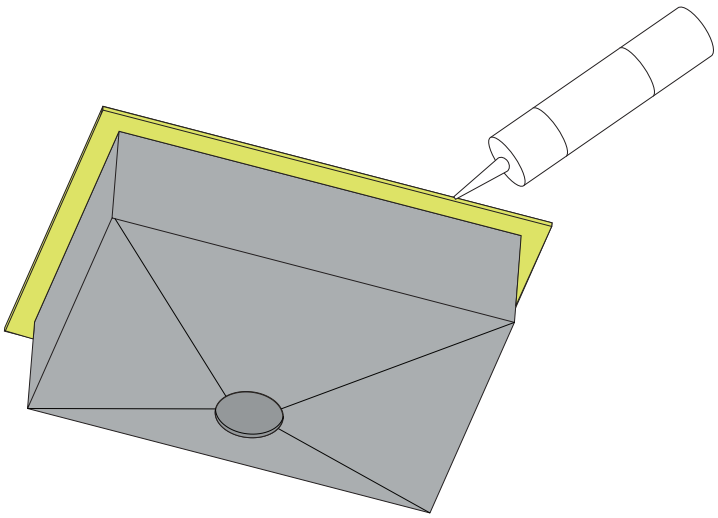

Copyright 2007-2011 Mila International, Inc. www.mila-international.com

Step 4: SINK INSTALLATION

IMPORTANT *** Immediately install the sink into counter top opening.**

1. Carefully place sink into the counter top opening.
2. Align the sink ensuring it is perfectly square with the counter top
3. Apply gentle and even downward pressure to the top of the sink frame.

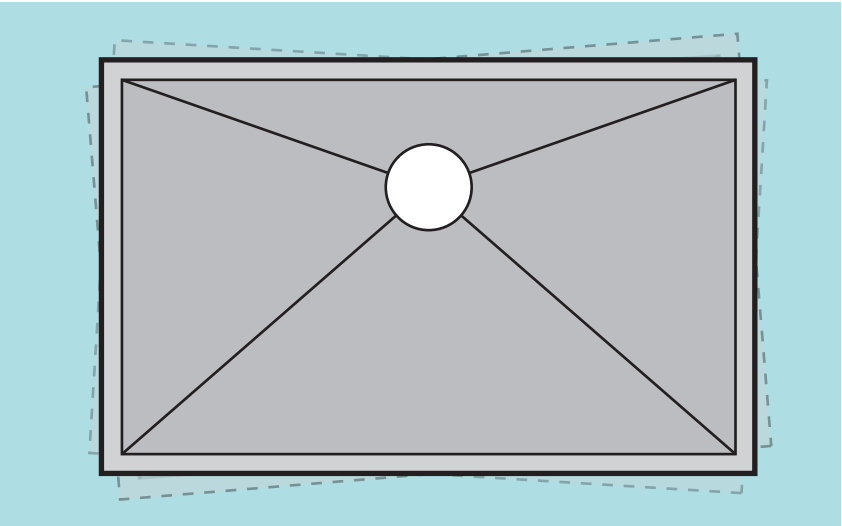

*** Once Step 4 is completed, proceed immediately to Step 5.**

Copyright 2007-2011 Mila International, Inc. www.mila-international.com

Step 5: CLEANING SILICONE

Using a **lint-free wiping cloth**, immediately wipe off excess silicone in the indicated order.

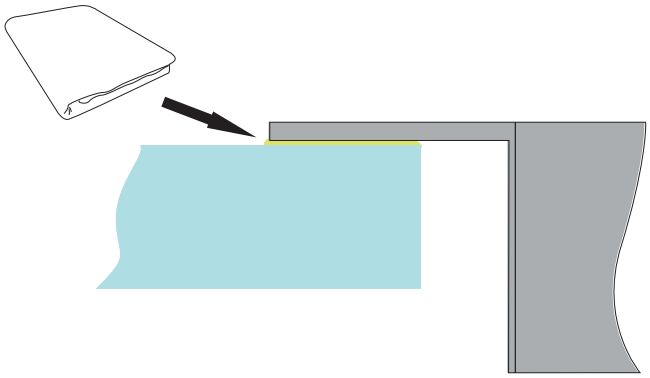

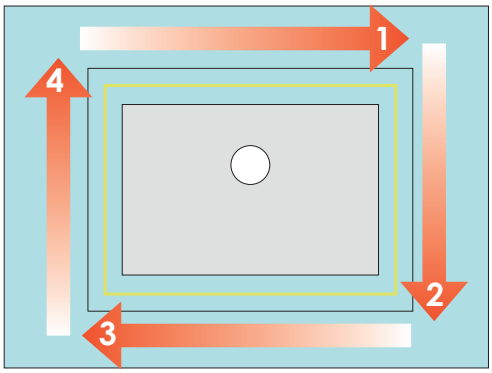

Step 6: FINAL PROCESS

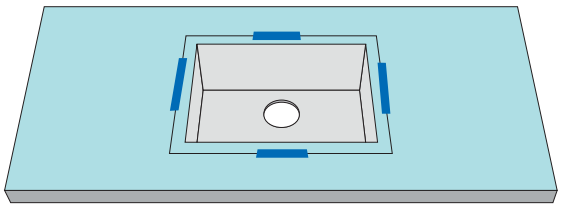

Allow 24 hours

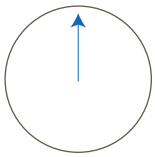

Before removing protective blue tape from the counter top and sink frame, lightly sand the gap between carrot-top and sink frame with 300 grid sandpaper to break residual silicone.

Carefully remove the blue painter's tape from the sink and the counter top.

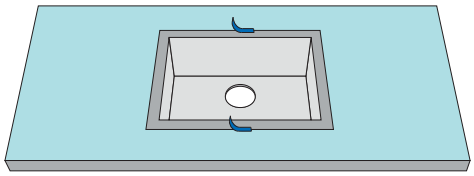

The installation is now complete. Please enjoy your sink!

MILA INTERNATIONAL MAKES NO WARRANTIES, EXPRESSED OR IMPLIED, INCLUDING BUT NOT LIMITED TO ANY WARRANTY OF MERCHANTABILITY OR OF FITNESS FOR A PARTICULAR PURPOSE, AS TO THE INFORMATION CONTAINED HERE IN OR THE PRODUCTS DESCRIBED HEREIN.

Copyright 2007-2011 Mila International, Inc. www.mila-international.com

Step 5: CLEANING SILICONE

Using a **lint-free wiping cloth**, immediately wipe off excess silicone in the indicated order.

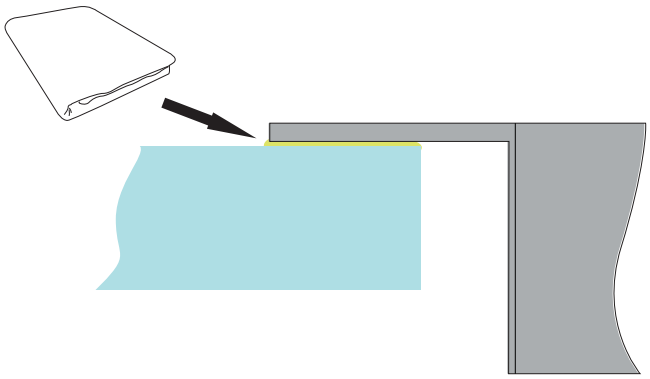

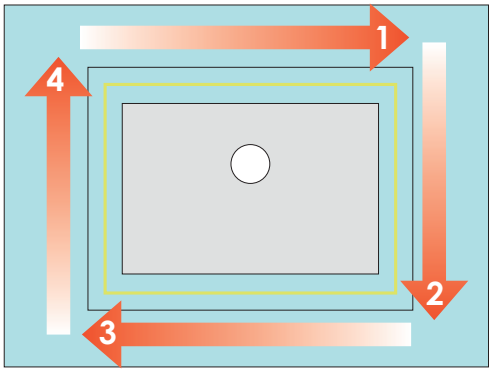

Step 6: FINAL PROCESS

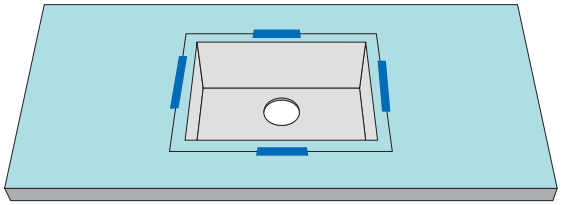

Allow 24 hours

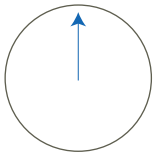

Before removing protective blue tape from the counter top and sink frame, lightly sand the gap between carrot-top and sink frame with 300 grid sandpaper to break residual silicone.

Carefully remove the blue painter's tape from the sink and the counter top.

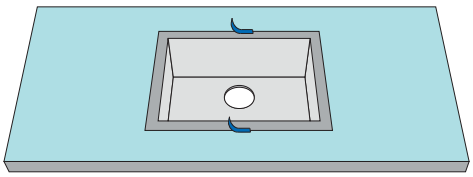

The installation is now complete. Please enjoy your sink!

MILA INTERNATIONAL MAKES NO WARRANTIES, EXPRESSED OR IMPLIED, INCLUDING BUT NOT LIMITED TO ANY WARRANTY OF MERCHANTABILITY OR OF FITNESS FOR A PARTICULAR PURPOSE, AS TO THE INFORMATION CONTAINED HERE IN OR THE PRODUCTS DESCRIBED HEREIN.

Copyright 2007-2011 Mila International, Inc. www.mila-international.com